DIAMOND SHIELD
Advanced Paint Protection System

RENEGADE 2014-19
IKON CASCADIA CHASSIS

PARTS:
1. Hood
2. Fender Caps (A,B)
3. Headlights (A,B)
4. Bumper (A,B)
5. Lower Bumper
6. Transitions (A,B)
7. Upper Step (A,B)
8. Top Step Corner (A,B)
9. Door Latch
10. Grab Handle
11. Kick Plate
12. Front Wheel Wells
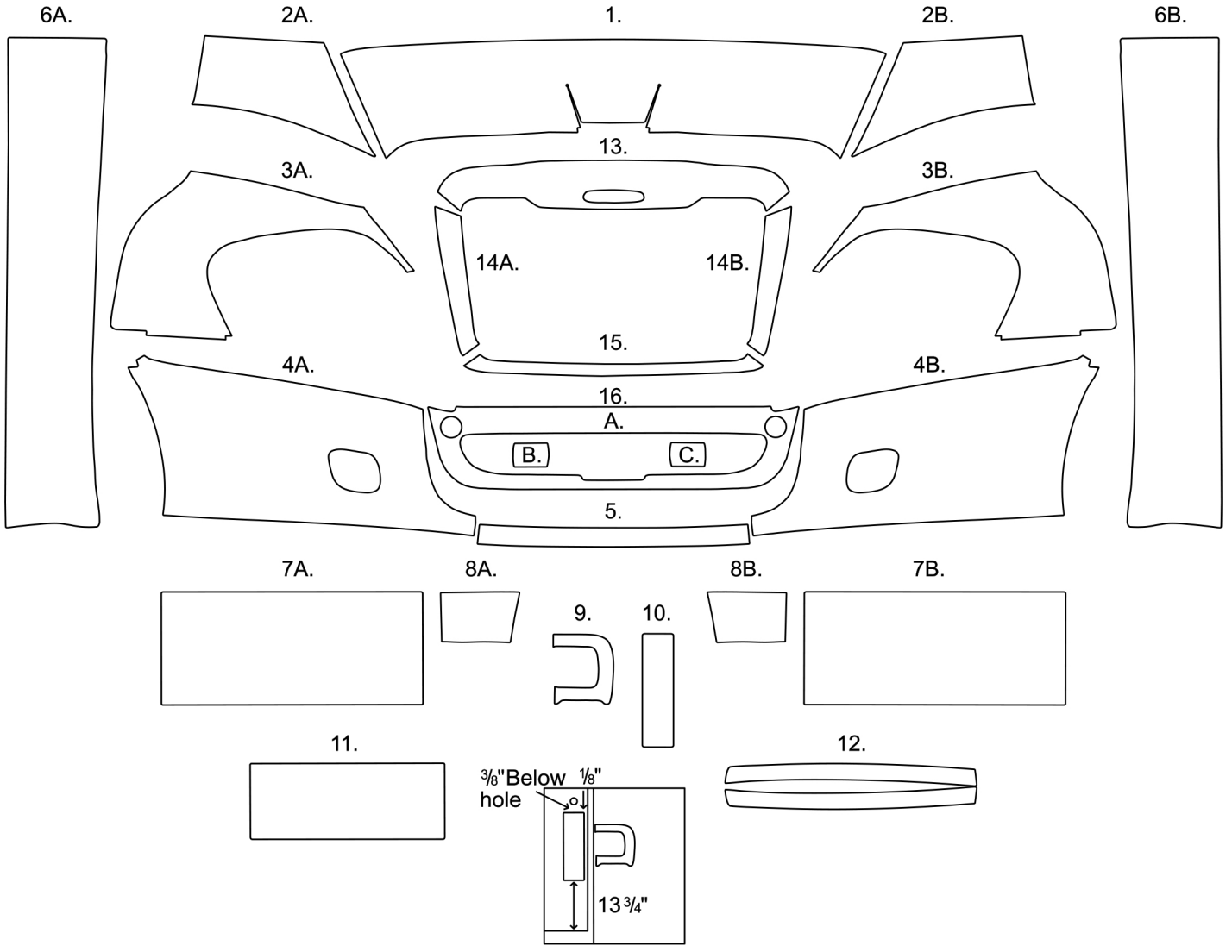
OPTIONS:
13. Upper Grille
14. Grille Sides (A,B)
15. Grille Bottom
16. Center Bumper (A-C)
17. Mirrors (Not Shown)