DIAMOND SHIELD
Advanced Paint Protection System

FOREST RIVER 2015
SOLERO MERCEDES CHASSIS PARTIAL HOOD

PARTS:
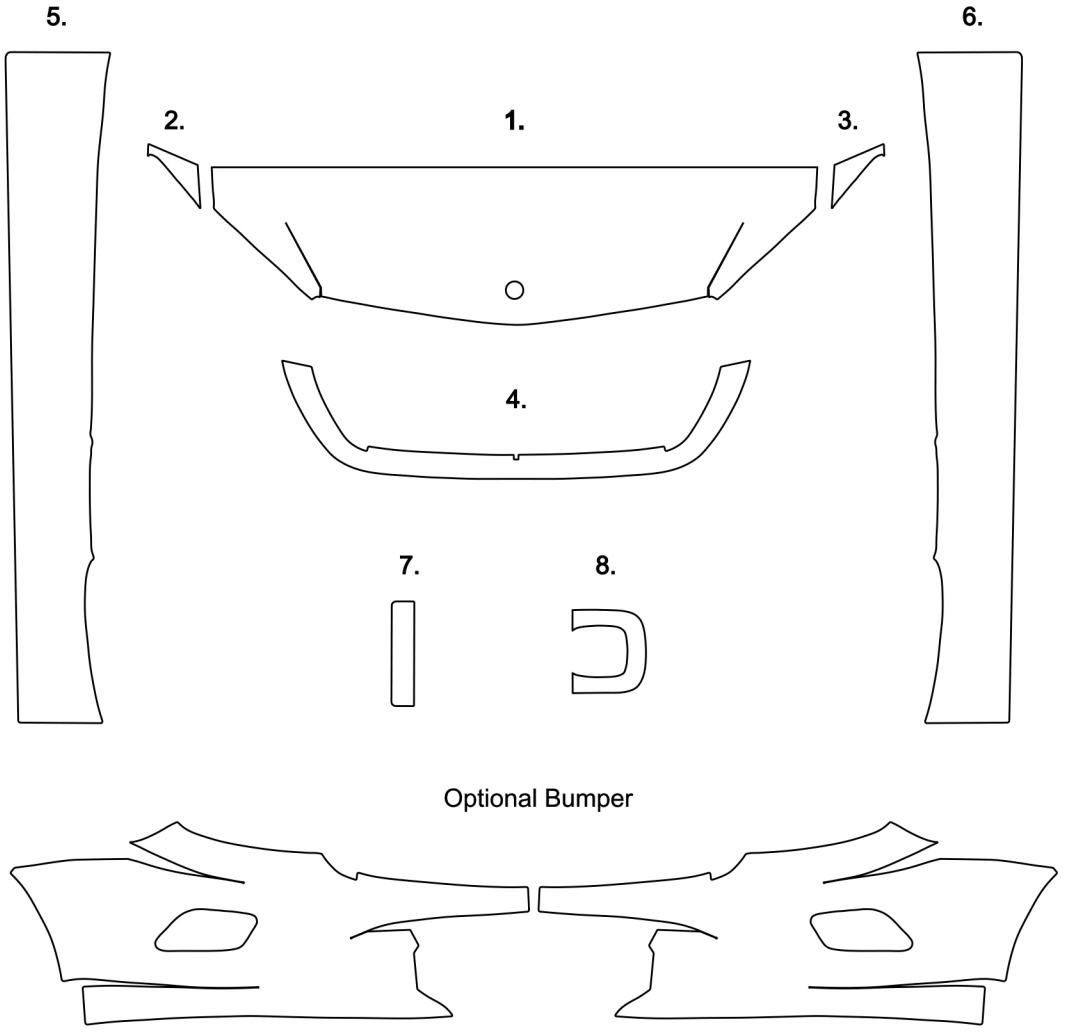
1. Hood
2. PS Fender Cap
3. DS Fender Cap
4. Lower Grill
5. PS Transition
6. DS Transition
7. Grab Handle
8. Door Latch